Agence Nord:
ZA Object'Ifs Sud - Lot A3
6 Allée Emilie du Châtelet
14123 Ifs
tél : 02.31.34.50.74
fax : 02.31.34.55.17

Agence Est:
Parc Club des Tanneries
2 Rue de la Faisanderie
67380 Lingolsheim
tél : 03.88.04.01.81
fax : 03.68.93.01.52

Agence Sud:
Bât Le Venango. 392 Rue Jean Dausset
AGROPARC - BP11575
84916 Avignon Cédex 9
tél : 04.90.27.17.95 fax : 04.90.27.17.52

www.deltalabo.fr
info@deltalabo.fr





HS 200

Manual grinding machine



HERZOG

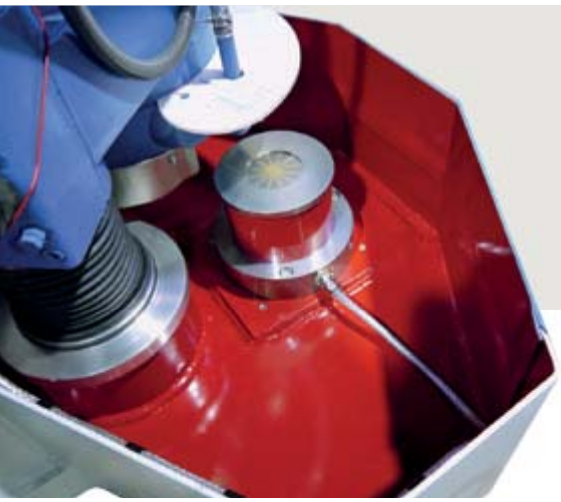

HS 200 with electro magnet

Manually operated swing grinding machine for a broad range of applications

At a glance

- Compact bench-top design with various mounting possibilities
- Due to the robust design reproducible surface grinding, even of difficult samples types
- Minimum of maintenance and long service life
- Easy handling and easy exchange of the grinding wheel

Easy handling

The HS 200 is a manually operated grinding machine for sample preparation of pig-iron and steel samples used in foundries, steel works and other metal processing companies.
Handling of the machine is easy. The easy running swinging arm allows sensitive grinding of samples. Due to the strong column and the swinging arm mounted in taper roller bearing the HS 200 enables reproducible surface grinding.



Wide range of possible applications

The HS 200 offers a compact design and, due to the table execution, ample mounting possibilities. Various clamping devices are available like parallel vice, pneumatic, permanent and electro magnet, as well as combination of parallel vice and permanent magnet.
The HS 200 is low-maintenance with easy exchange of the grinding wheel and low noise and dust load. It is suitable for wet and dry grinding.

Flow chart

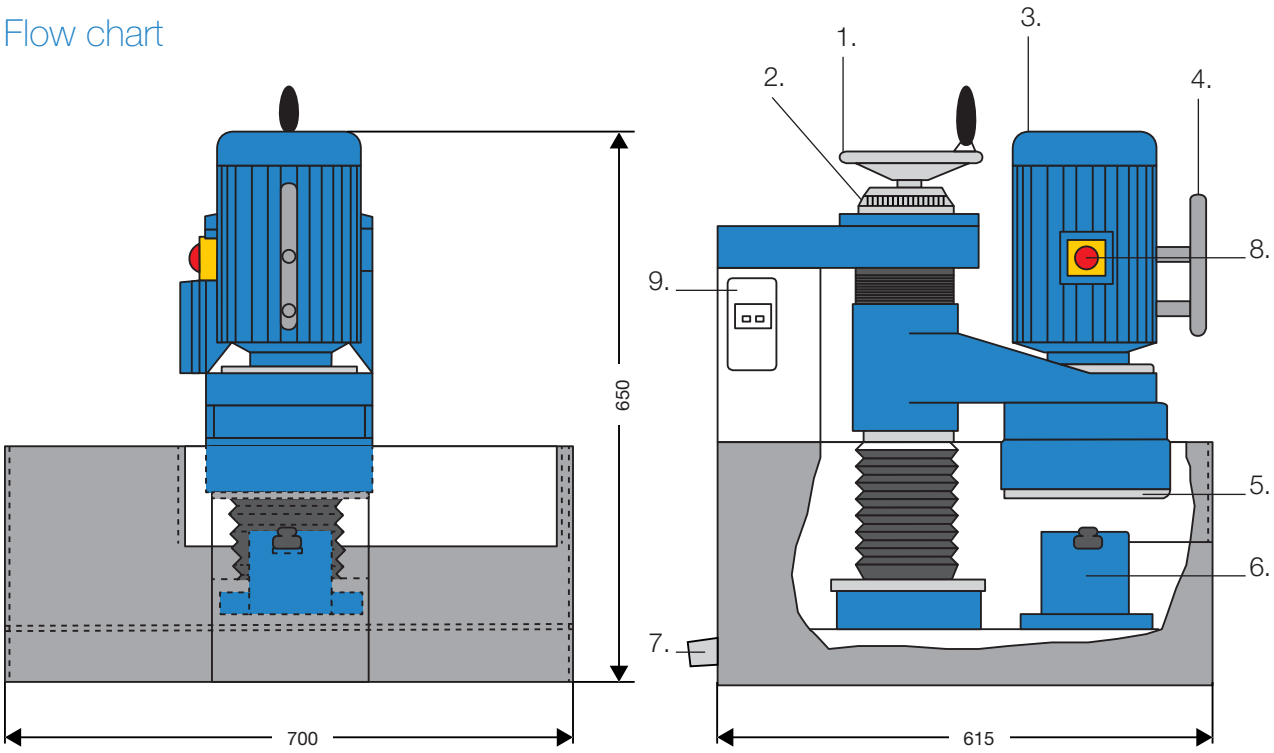

1. Setting of the grinding wheel
2. Setting scale
3. Grinding motor
4. Handle for swinging movement
5. Grinding wheel
6. Clamping device
7. Outlet of cooling agent
8. On-off-switch
9. Protective motor switch

Options for clamping device:



Parallel vice



Permanent magnet



Combination parallel vice-permanent magnet

Technical data HS 200

Model: HS 200	
Dimensions L x B x H	
Machine:	700 x 615 x 650 mm
Weight	
Machine:	Approx. 200 kg
Electrical power supply and consumption	
Voltage:	400 V, 50 Hz, 3-phase AC, or customized
Power consumption	Approx. 1.5 kVA
Motor speed	2,800 U/ min
Grinding wheel dimensions	
Diameter:	200 mm
Height:	100 mm

Options

- Liquid cooling device
- Table
- Demagnetization device for 230V, 50 Hz, 1 phase
- Connection socket for dust extraction

Clamping devices:

- Parallel vice
- Pneumatic clamping device
- Permanent magnet
- Electro magnet
- Combination parallel vice-permanent magnet

CE The design of the machine complies with the applicable accident prevention and VDE (German association of electronic engineers) regulations. We reserve the right to make technical changes.

HS200 / 03.2015-E-1

HERZOG Maschinenfabrik GmbH & Co. KG
Auf dem Gehren 1
49086 Osnabrück
Germany
Phone +49 541 9 33 20
Fax +49 541 9 33 232
info@herzog-maschinenfabrik.de
www.herzog-maschinenfabrik.de

HERZOG Automation Corp.
16600 Sprague Road Suite 400
Cleveland, Ohio 44130
USA
Phone +1 440 891 9777
Fax +1 440 891 9778
info@herzogautomation.com
www.herzogautomation.com

HERZOG Japan Co., Ltd.
3-7, Komagome 2-chome
Toshima-ku
Tokio 170-0003
Phone +81 3 5907 1771
Fax +81 3 5907 1770
info@herzog.co.jp
www.herzog.co.jp

HERZOG (Shanghai) Automation Equipment Co., Ltd.
Section A2,2/F, Building 6,
No.473, West Fute 1st Road,
Waigaoqiao F.T.Z, Shanghai, 200131,
P.R. China
Fon +86 21 50375915
Fax +86 21 50375713
MP +86 15 80 07 50 53 3
xc.zeng@herzog-automation.com.cn
www.herzog-automation.com.cn

Agence Nord:
ZA Object'Ifs Sud - Lot A3
6 Allée Emilie du Châtelet
14123 Ifs
tél : 02.31.34.50.74
fax : 02.31.34.55.17

Agence Est:
Parc Club des Tanneries
2 Rue de la Faisanderie
67380 Lingolsheim
tél : 03.88.04.01.81
fax : 03.68.93.01.52

Agence Sud:
Bât Le Venango. 392 Rue Jean Dausset
AGROPARC - BP11575
84916 Avignon Cédex 9
tél : 04.90.27.17.95 fax : 04.90.27.17.52

DELTA LABO

www.deltalabo.fr
info@deltalabo.fr

HERZOG